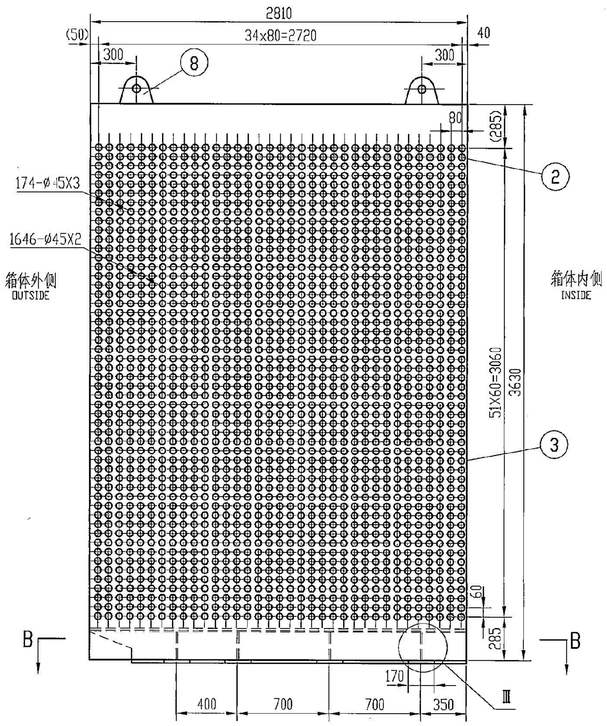

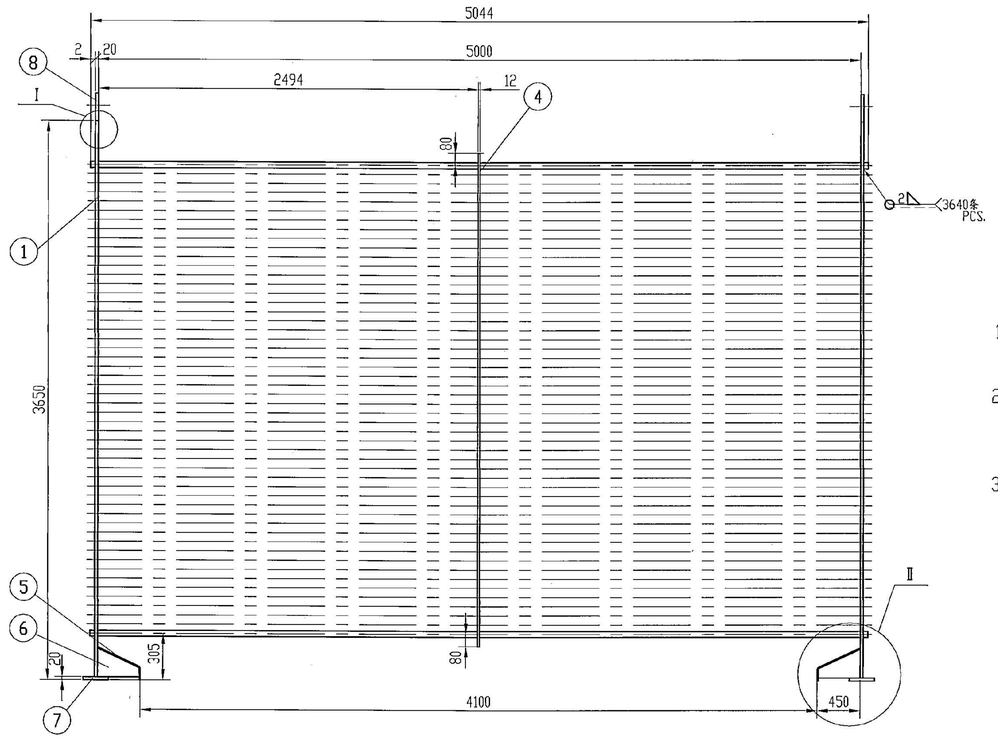

技术要求

1. 管箱按技术条件DG1106-2011制造；
2. 序号8吊耳与序号1管板按详图I焊接，吊耳在工地吊装完成后切割掉，并将管板打磨平整；
3. 图中 ⊕ 为φ45X2的管子，材料为Q355GNH，
   ⊘ 为φ45X3的管子，材料为Q355GNH。

NOTES

1. SPECIFICATION FOR MANUFACTURE OF TUBULAR BANK, ACCORDING TO DG1106-2011;
2. WELDING BETWEEN LIFTING LUG(No.8) AND TUBESHEET(No.1) PER THE DETAIL I, THE LIFTING LUG SHOULD BE CUT AFTER INSTALLATION AND POLISHED SMOOTH;
3. KEY TO SYMBOL ⊕ TUBE φ45X2;Q355GNH
   ⊘ TUBE φ45X3;Q355GNH.

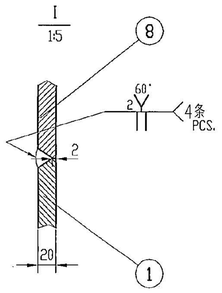

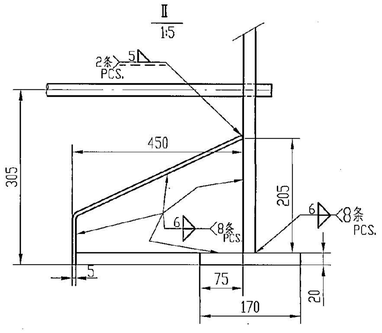

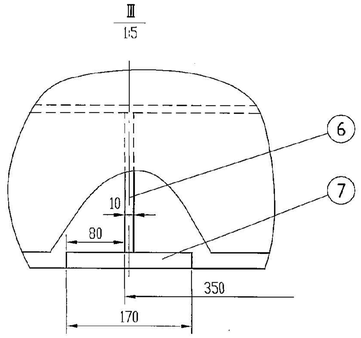

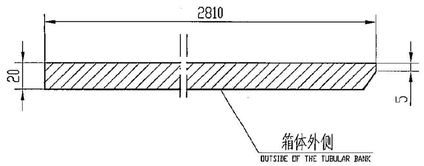

序号 NO.	图号 DRAWING NO.	名称 DESCRIPTION	数量 QTY.	材料 MATL.	单重 SGL.	总重 TOT.	备注 REMARKS
8	62J41-1-5	吊耳 LIFTING LUG	4	Q245R	3.4	13.6	
7	无图 NO DWG.	钢板δ20;170X170 PLATE	8	Q245R	4.54	36.3	
6	62J41-1-4	肋板δ10 RIB	8	Q235A	4.32	34.6	
5	62J41-1-3	弯板δ5 BENT PLATE	2	Q235A	54.6	109	正反各1 A.S.1&O.H.1
4	62J41-1-2	隔板 BAFFLE PLATE	1	Q245R		567	
3	无图 NO DWG.	管子φ45X2;L=5044 TUBE	1646	Q355GNH	10.7	17612	
2	无图 NO DWG.	管子φ45X3;L=5044 TUBE	174	Q355GNH	15.7	2732	
1	62J41-1-1	管板 TUBESHEET	2	Q245R	1126	2252	正反各1 A.S.1&O.H.1

REV.	DATE	DESCRIPTION	DESIGN	CHECK	REVIEW	APPROVAL

dssp power — PT. DSSP POWER SUMSEL

中国电力工程有限公司
CHINA NATIONAL ELECTRIC ENGINEERING CO., LTD.

哈尔滨电站设备成套设计研究所有限公司
HARBIN POWER SYSTEM ENGINEERING & RESEARCH INSTITUTE CO., LTD.

东方锅炉股份有限公司
DONGFANG BOILER GROUP CO., LTD.

印度尼西亚苏姆赛尔-5 (2×150 MW)坑口燃煤电站
Mine Mouth CFSPP SUMSEL-5 (2×150 MW) PROJECT, INDONESIA

设计 DES.	代雪松	标检 STD.		管箱 TUBULAR BANK	图号 DRAWING NO.	62J41-1-0	
校对 CK.	俞丽君 2013.01	工艺 TECH.			比例 SCALE 1:20	重量 WT. 23357 kg	
审核 AUTH.		批准 APPR.		空气预热器管箱 TUBULAR AIR PREHEATER BANK	版本号 REV. A	第 1 页 SHEET 1 共 1 页 OF 1	
审定 VERI.		日期 DATE		WORK NO.:W1151693(UNIT#1) W1151706(UNIT#2)	UNITS mm	8 A4	施工设计 ISSUED FOR CONSTRUCTION

印尼苏门答腊岛坑口电厂2×150MW项目，仅发图纸，仅供参考，不得以任何方式进行部分或全部复制、分发、出借、出售或用于商业目的。未经东方锅炉股份有限公司书面同意，不得以任何方式进行部分或全部复制、分发、出借、出售或用于商业目的。
Indonesia Mine Mouth CFSPP SUMSEL-5 (2×150 MW) Project, Dongfang Boiler Group Co., Ltd. This drawing is for reference only. Any reproduction, distribution and utilization of these drawings or documents as well as the communication of their contents to others by whatever means in parts or in whole without express authorization by DBC are prohibited. Offenders will be held liable for the payment of damages. All rights reserved in the event of the grant of a patent, utility model or design.